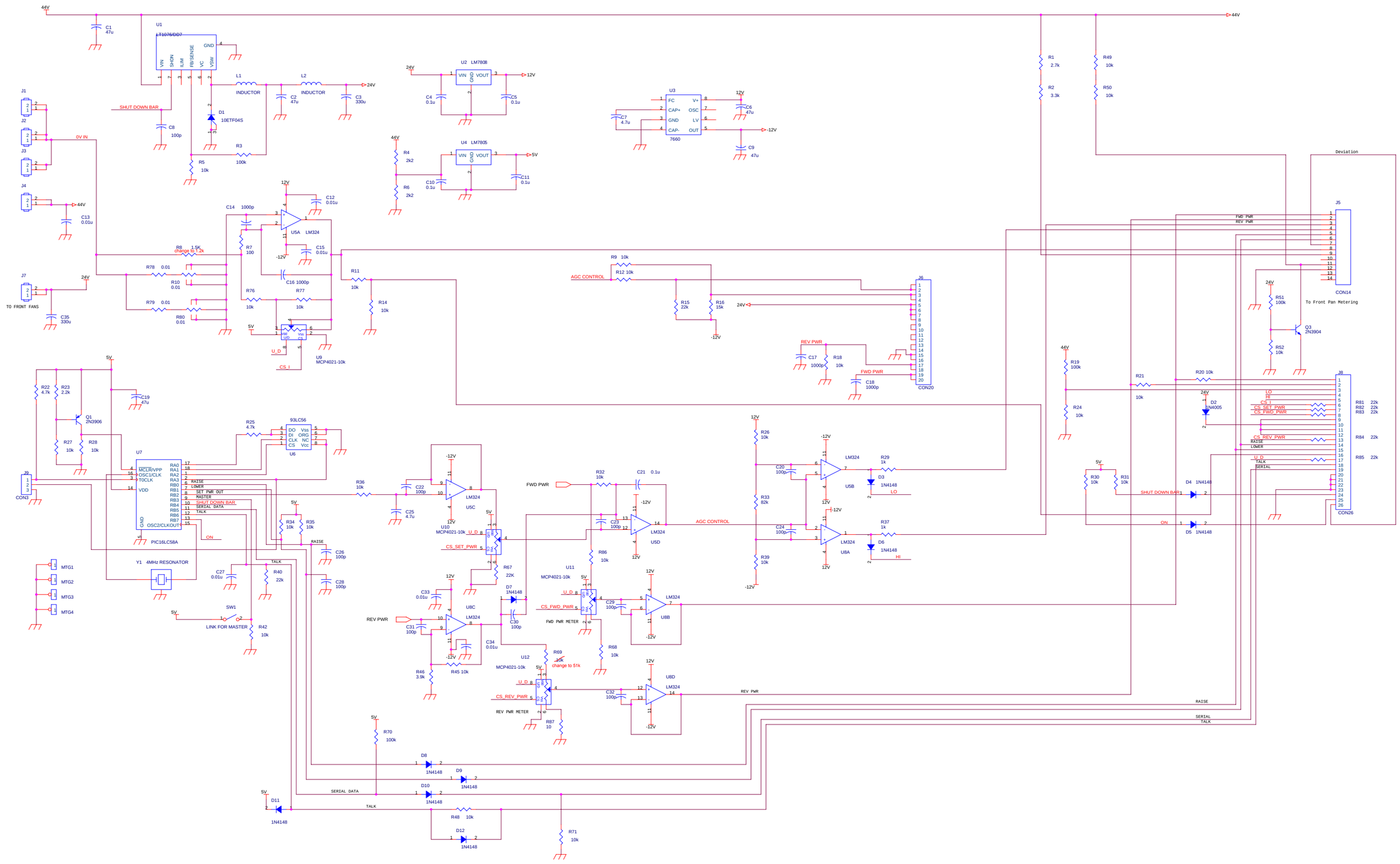

44V
U1
LT1076/DD7
VIN
SHDN
ILIM
FB/SENSE
VC
VSW
GND
SHUT DOWN BAR
C1 47u
C8 100p
D1 10ETF04S
L1 INDUCTOR
L2 INDUCTOR
C2 47u
C3 330u
24V
R3 100k
R5 10k
J1
J2
J3
J4
0V IN
C13 0.01u
J7
TO FRONT FANS
C35 330u
U2 LM7808
VIN
VOUT
C4 0.1u
C5 0.1u
U3
FC
CAP+
GND
CAP-
V+
OSC
LV
OUT
7660
C7 4.7u
C6 47u
C9 47u
12V
-12V
U4 LM7805
R4 2k2
R6 2k2
C10 0.1u
C11 0.1u
5V
C14 1000p
C12 0.01u
U5A LM324
C15 0.01u
R8 1.5K change to 1.2k
R7 100
R78 0.01
R10 0.01
R79 0.01
R80 0.01
C16 1000p
R76 10k
R77 10k
U9 MCP4021-10k
U_D
CS_I
R11 10k
R14 10k
R9 10k
R12 10k
AGC CONTROL
R15 22k
R16 15k
J6
CON20
REV PWR
C17 1000p
R18 10k
FWD PWR
C18 1000p
R1 2.7k
R2 3.3k
R49 10k
R50 10k
Deviation
J5
CON14
To Front Pan Metering
R51 100k
Q3 2N3904
R52 10k
R19 100k
R24 10k
R21 10k
R20 10k
D2 1N4005
J8
CON26
R81 22k
R82 22k
R83 22k
R84 22k
R85 22k
LO
HI
CS_I
CS_SET_PWR
CS_FWD_PWR
CS_REV_PWR
RAISE
LOWER
U_D
TALK
SERIAL
R22 4.7k
R23 2.2k
C19 47u
Q1 2N3906
R27 10k
R28 10k
U7
PIC16LC58A
MCLR/VPP
OSC1/CLK
T0CLK
VDD
GND
OSC2/CLKOUT
RA0
RA1
RA2
RA3
RB0
RB1
RB2
RB3
RB4
RB5
RB6
RB7
SET PWR OUT
MASTER
SHUT DOWN BAR
SERIAL DATA
ON
Y1 4MHz RESONATOR
J9
CON3
MTG1
MTG2
MTG3
MTG4
SW1
LINK FOR MASTER
R42 10k
R25 4.7k
93LC56
DO
DI
CLK
CS
Vss
ORG
NC
Vcc
U6
R36 10k
C22 100p
C25 4.7u
LM324
U5C
U10 MCP4021-10k
CS_SET_PWR
R67 22K
R34 10k
R35 10k
C26 100p
C27 0.01u
R40 22k
C28 100p
C33 0.01u
U8C
REV PWR
C31 100p
C34 0.01u
R46 3.9k
R45 10k
D7 1N4148
C30 100p
U12 MCP4021-10k
R69 10k change to 51k
CS_REV_PWR
REV PWR METER
R87 10
FWD PWR
R32 10k
C21 0.1u
C23 100p
U11 MCP4021-10k
CS_FWD_PWR
FWD PWR METER
R86 10k
R68 10k
C29 100p
U8B
C32 100p
U8D
R26 10k
R33 82k
R39 10k
C20 100p
C24 100p
U5B
U8A
R29 1k
R37 1k
D3 1N4148
D6 1N4148
R30 10k
R31 10k
D4 1N4148
D5 1N4148
R70 100k
D8 1N4148
D9 1N4148
D10 1N4148
D11 1N4148
R48 10k
D12 1N4148
R71 10k